TOTO | WASHLET™

TCF6041TH

Features

- HEATED SEAT *soft-closing with temperature control*
- *Rear and Front cleanse*
- *Oscillating cleanse*
- *Adjustable water temperature*
- *Adjustable water pressure*
- DEODORIZER *activates during using*
- *Auto energy saving function*

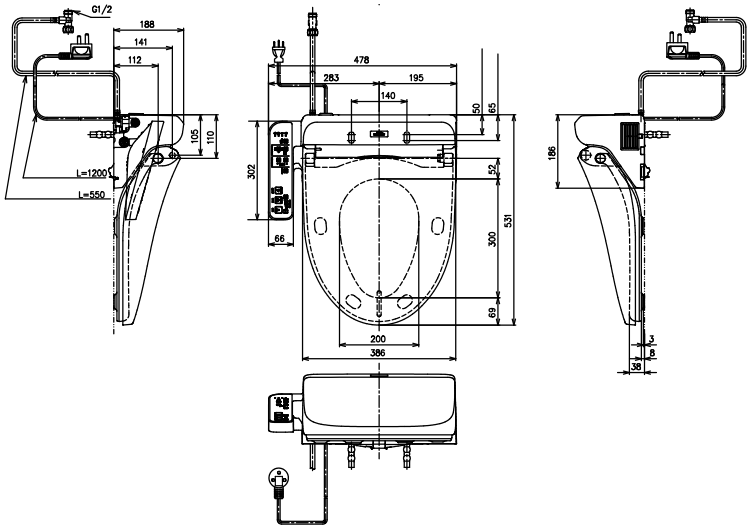

Specifications

Water Pressure	: *0.05Mpa~0.75Mpa*
Power Rating	: *220~240V , 50/60Hz , 262~307W*
Length of Power Cord	: *1.2 m*

Colors

White

Please consult a TOTO representative for details

Caution: WASHLET™ *may not fit certain toilet bowl design. Please check the compatibility of* WASHLET™ *and your toilet bowl prior purchase.*

TOTO (THAILAND) CO.,LTD
Bangkok Office : G Tower Grand Rama 9,12th Floor, South Wing, 9 Rama IX Road,Huaykwang Sub-district,Huaykwang District, Bangkok. 10310 Thailand
Tel : +(66)2-117-9520(AUTO) Fax : +(66)2-117-9527
th.toto.com

All rights reserved by TOTO company. Specifications and size are subject to change without notice.