TOTO | FAUCETS

TLP02308T

ZL Series
Single Lever Lavatory Faucet
(Tall Vessel)(w/o Pop-up Waste)

Features

- Design Concept is Gorgeous and Organic
- TOTO orignal cartridge for smooth control

Specifications

Finish:	Chrome
Material:	Stainless Steel
Water Pressure:	0.05MPa ~ 1.0MPa

Parts description

- TLP02308T
  Single Lever Lavatory Faucet (Tall Vessel)
  (w/o Pop-up Waste)

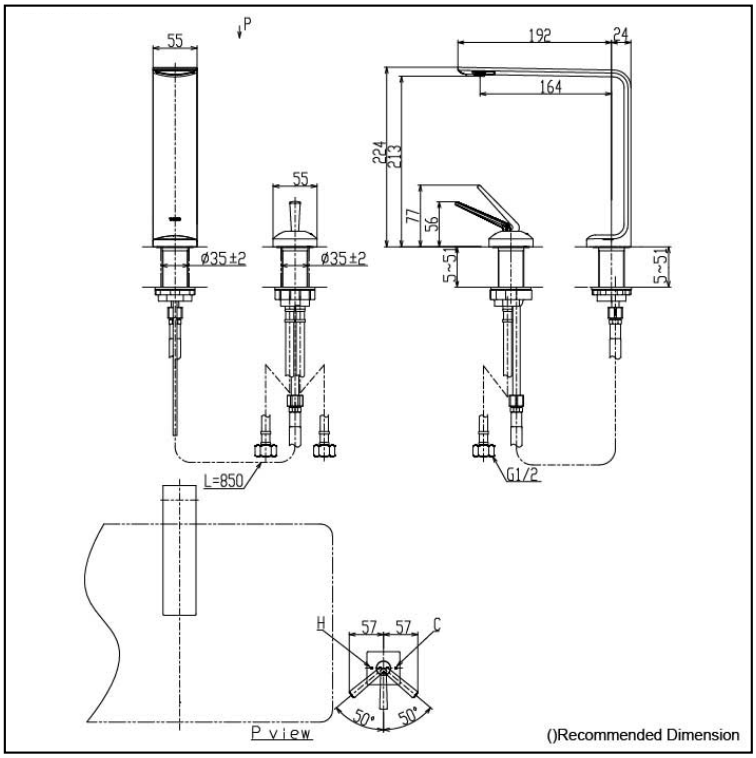

Polished Chrome

Polished Nickel #PN

Brushed Nickel #BN

Polished French Gold #PFG

Brushed French Gold #BFG

Polished Bronze #PBR

Brushed Bronze #BBR

Please consult a TOTO representative for details

TOTO (THAILAND) CO.,LTD
Bangkok Office : G Tower Grand Rama 9,12th Floor, South Wing, 9 Rama IX Road,Huaykwang Sub-district,Huaykwang District, Bangkok. 10310 Thailand
Tel : +(66)2-117-9520(AUTO) Fax : +(66)2-117-9527
th.toto.com

All rights reserved by TOTO company. Specifications and size are subject to change without notice.