TOTO

FAUCETS

ZA Series
Floor Standing Bath & Shower Set

TBP03301T

Features

- Lightness and dignity in a natural shape for a timeless design
- Sharp edges, beauty of generous curves combines with the contrast of polished and hairline finishes in a modulated design which achieves a balance of a different order
- An asymmetrical shaped like a small stone handle gives a beautiful aesthetic appearance at all angles with a rhythmically approach
- High corrosion resistance plating
- Easy Installation and Usage
- Long lasting COMFORT GLIDE mechanism for a smooth operation
- 1 mode function hand shower (COMFORTWAVE)

Specifications

Finish:	Chrome
Material:	Brass
Water Pressure:	0.05MPa~1.0MPa

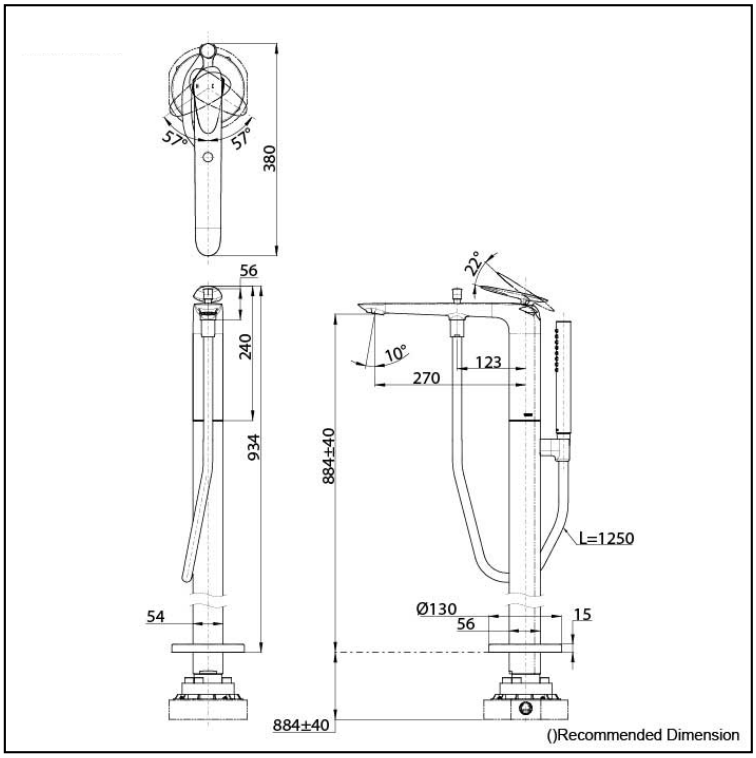

Parts description

- TBP03301A
  Floor-standing Bath & Shower Set
- TBN01105B
  Floor-standing Bath Filler Base

Polished Chrome

Polished Nickel #PN

Brushed Nickel #BN

Polished French Gold #PFG

Brushed French Gold #BFG

Polished Bronze #PBR

Brushed Bronze #BBR

Please consult a TOTO representative for details

TOTO (THAILAND) CO.,LTD
Bangkok Office : G Tower Grand Rama 9,12th Floor, South Wing, 9 Rama IX Road,Huaykwang Sub-district,Huaykwang District, Bangkok. 10310 Thailand
Tel : +(66)2-117-9520(AUTO) Fax : +(66)2-117-9527
th.toto.com

All rights reserved by TOTO company. Specifications and size are subject to change without notice.