TOTO | TOILETS

WASHLET™

CW887UW5

Features

- *Modern & luxury design*
- *Stain Resistant, Easy-to-clean Surface with* CEFIONTECT *Technology*
- TORNADO FLUSH *System,* WATER SAVING *(4.8 L)*
- *Fully equipped with comfortable rear, and front cleansing functions*
- *Adjustable* WARM AIR DRYING
- HEATED SEAT *with temperature control*
- *Auto powerful* DEODORIZER *activates after every usage*

Specifications

Flush System	: TORNADO Siphon-Jet
Water Use	: *4.8 (L)*
Bowl Shape	: *Elongated*
Rough-in	: *305 (mm)*
Water Pressure	: *0.05Mpa~0.75Mpa*
Seat & Cover	: ***TCF6531Z***
Power Rating	: *220~240V , 50/60Hz , 264~309 W*

GOOD DESIGN GREEN GOOD DESIGN AWARD 2016

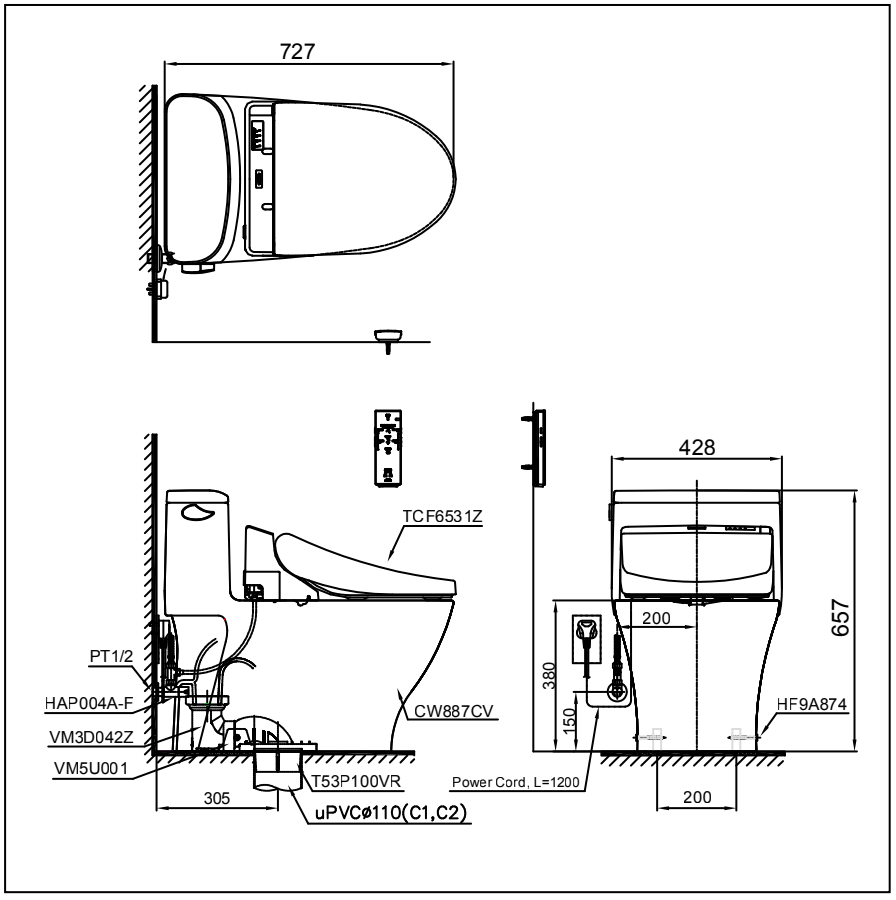

Colors

White

Please consult a TOTO representative for details

TOTO (THAILAND) CO.,LTD
Bangkok Office : G Tower Grand Rama 9,12th Floor, South Wing, 9 Rama IX Road,Huaykwang Sub-district,Huaykwang District, Bangkok. 10310 Thailand
Tel : +(66)2-117-9520(AUTO) Fax : +(66)2-117-9527
th.toto.com

All rights reserved by TOTO company. Specifications and size are subject to change without notice.