TOTO | FAUCETS

TBG01202T

GO Series
Bath & Shower Set

Features

- *Design concept is gorgeous and organic*
- *Safety control with heat insulating handle.*
- *1 mode function hand shower (Round Shape, Comfort Wave)*

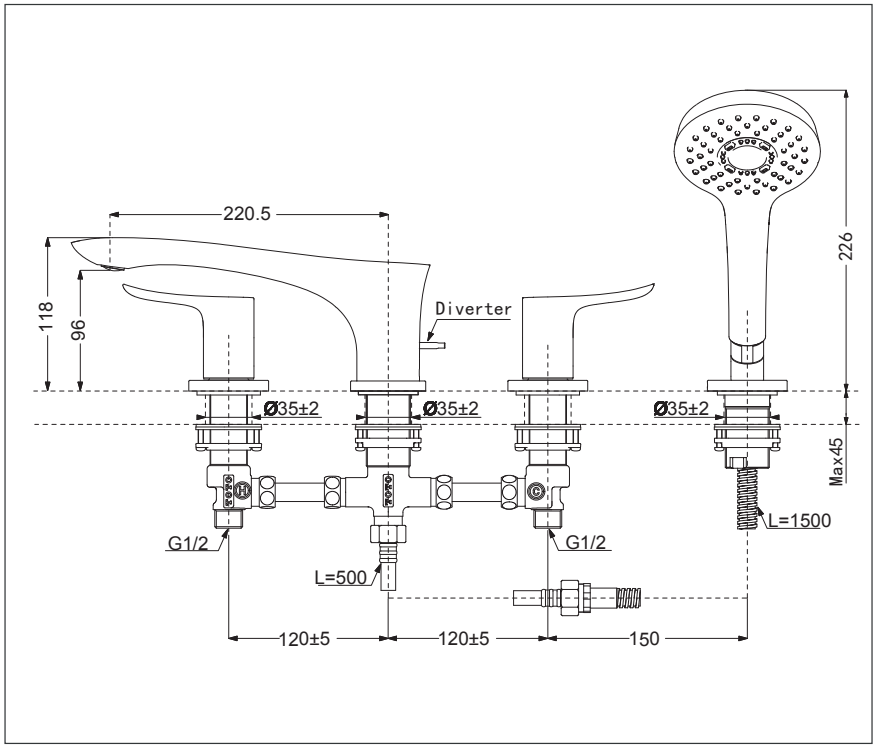

Specifications

Finish	*: Chrome*
Water Pressure	*: 0.1 ~ 1.0 Mpa*
Material	*: Brass (Faucet)* *Plastic (Hand Shower)*

Parts Description

- ***TBG01202T***
  4-hole Bath & Shower Set

Please consult a TOTO representative for details

TOTO (THAILAND) CO.,LTD
Bangkok Office : G Tower Grand Rama 9,12th Floor, South Wing, 9 Rama IX Road,Huaykwang Sub-district,Huaykwang District, Bangkok. 10310 Thailand
Tel : +(66)2-117-9520(AUTO) Fax : +(66)2-117-9527
th.toto.com

All rights reserved by TOTO company. Specifications and size are subject to change without notice.