TOTO | FITTINGS

AUTO FAUCET

TTLA102K-AC

Features

- Infra-red sensor, public use applicable
- Smaller body, space saving.

Specifications

Water Pressure	: 0.05MPa - 0.75MPa
Finish	: Nickel Chrome
Material	: Brass
Flow Rate	: 2L/min @0.2MPa

Parts description

- ***TTLA102K-AC***

  Auto Faucets (AC220V)

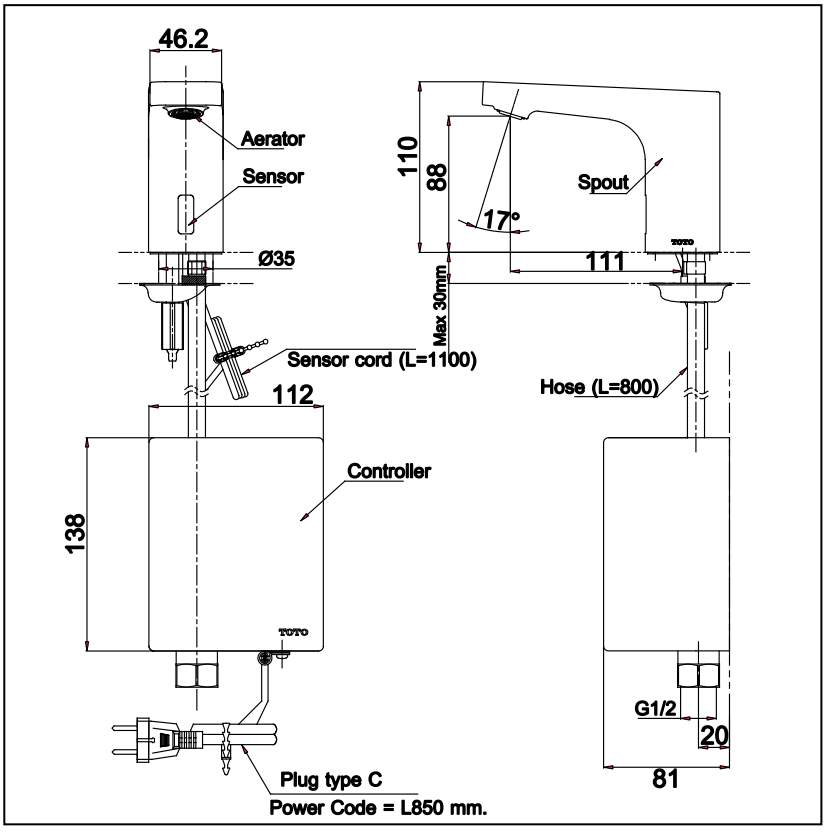

Remarks:

Please result TOTO sales representative for detail.

TOTO (THAILAND) CO.,LTD
Bangkok Office : G Tower Grand Rama 9,12th Floor, South Wing, 9 Rama IX Road,Huaykwang Sub-district,Huaykwang District, Bangkok. 10310 Thailand
Tel : +(66)2-117-9520(AUTO) Fax : +(66)2-117-9527
th.toto.com

All rights reserved by TOTO company. Specifications and size are subject to change without notice.