TOTO | FAUCETS

TLG03305T

GS Series
Single Lever Lavatory Faucet
(Tall Vessel)
(with pop-up)

reddot award 2018
winner

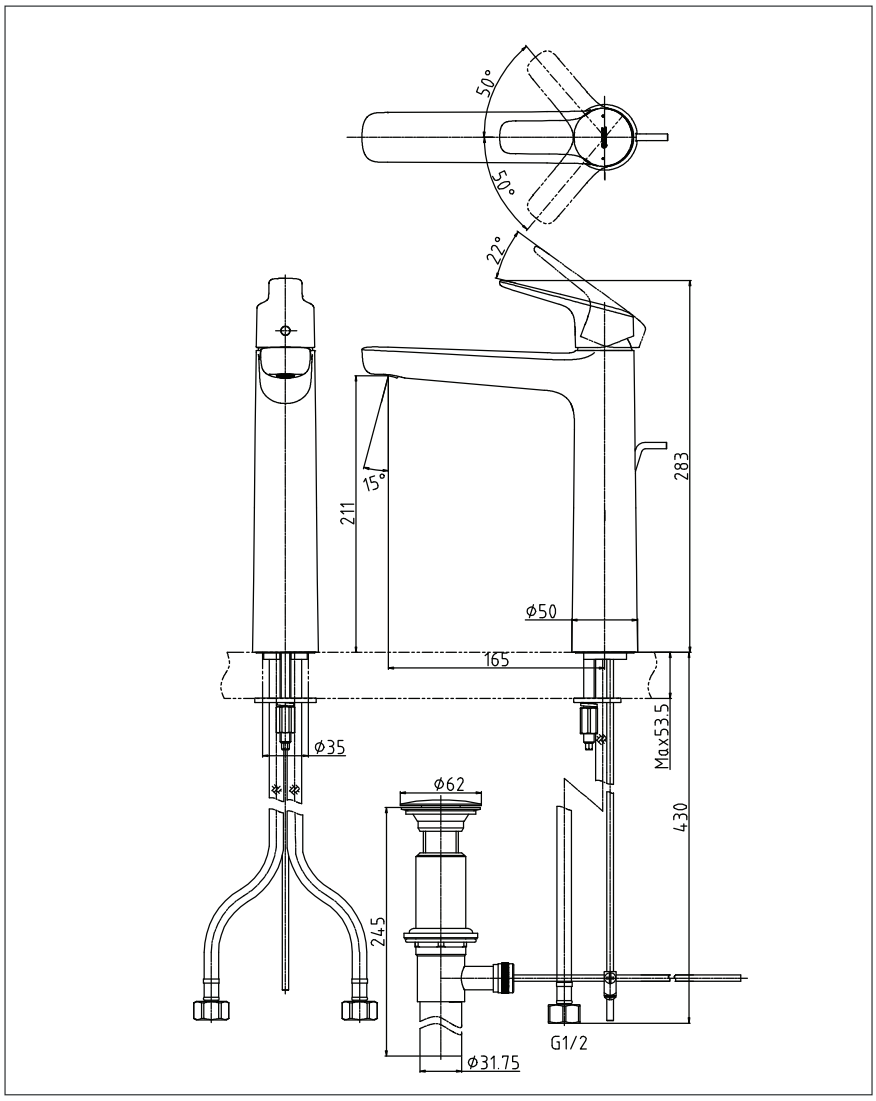

Features

- *Design Concept is Gorgeous and Regal*
- *Long lasting, comfort glide mechanism for a smooth operation*
- *High corrosion resistance plating*

Specifications

Finish	*: Chrome*
Material	*: Brass*
Water Pressure	*: 0.05 ~ 1.0 Mpa*

Parts Description

- ***TLG03305T***
  Single Lever Lavatory Faucet
  (Tall Vessel)
  (with pop-up)

Please consult a TOTO representative for details

TOTO (THAILAND) CO.,LTD
Bangkok Office : G Tower Grand Rama 9,12th Floor, South Wing, 9 Rama IX Road,Huaykwang Sub-district,Huaykwang District, Bangkok. 10310 Thailand
Tel : +(66)2-117-9520(AUTO) Fax : +(66)2-117-9527
th.toto.com

All rights reserved by TOTO company. Specifications and size are subject to change without notice.