# TOTO | FAUCETS

## TLG03301T

*GS Series*
*Single Lever Lavatory Faucet*
*(with pop-up waste)*

reddot award 2018
winner

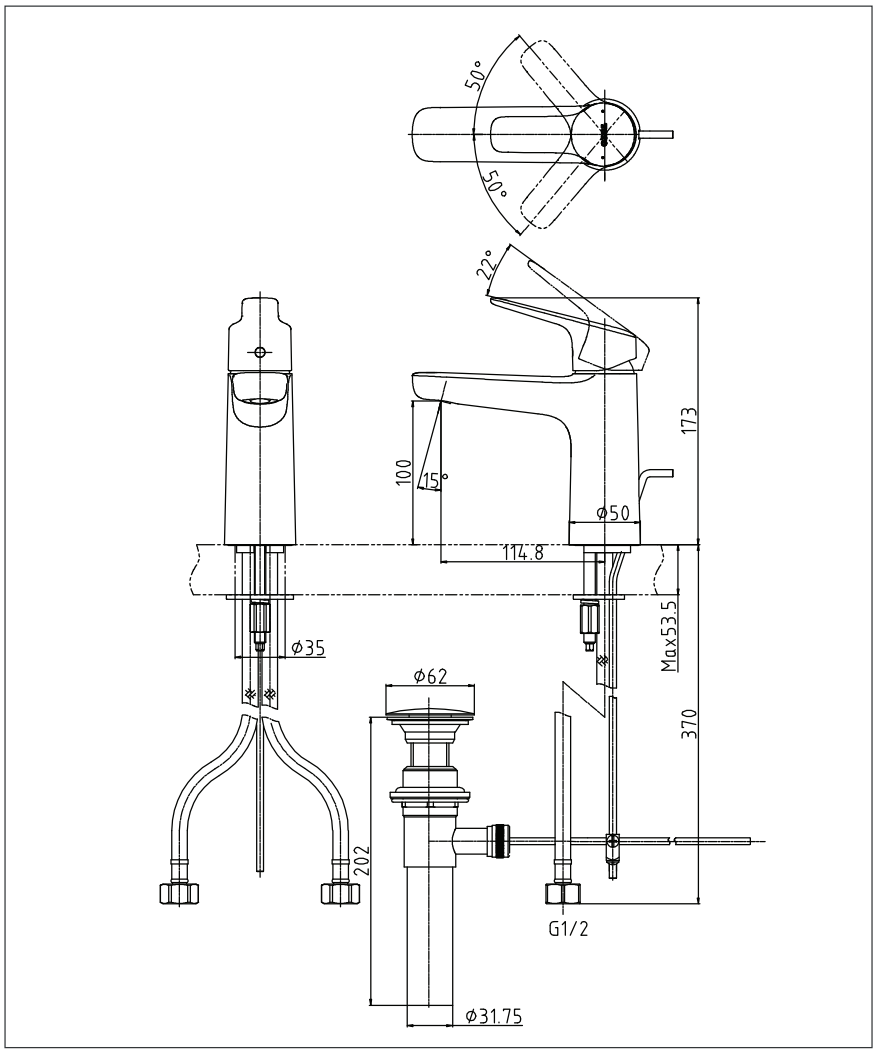


## Features

- *Design Concept is Gorgeous and Regal*
- *Long lasting, comfort glide mechanism for a smooth operation*
- *High corrosion resistance plating*

## Specifications

| | |
|---|---|
| *Finish* | *: Chrome* |
| *Material* | *: Brass* |
| *Water Pressure* | *: 0.05 ~ 1.0 Mpa* |

## Parts Description

- ***TLG03301T***
  Single Lever Lavatory Faucet
  (with pop-up waste)

*Please consult a TOTO representative for details*


TOTO (THAILAND) CO.,LTD
Bangkok Office : G Tower Grand Rama 9,12th Floor, South Wing, 9 Rama IX Road,Huaykwang Sub-district,Huaykwang District, Bangkok. 10310 Thailand
Tel : +(66)2-117-9520(AUTO) Fax : +(66)2-117-9527
th.toto.com



All rights reserved by TOTO company. Specifications and size are subject to change without notice.