TOTO | FAUCETS

TBG04302T

GA Series
Single Lever Bath&Shower Mixer
Without Hand Shower Set

Features

- *Design Concept is Gorgeous and Advance.*
- *TOTO original cartridge for smooth control*
- *High corrosion resistance plating*

Specifications

Finish	*: Chrome*
Material	*: Brass*
Water Pressure	*: 0.05 ~ 1.0 Mpa*

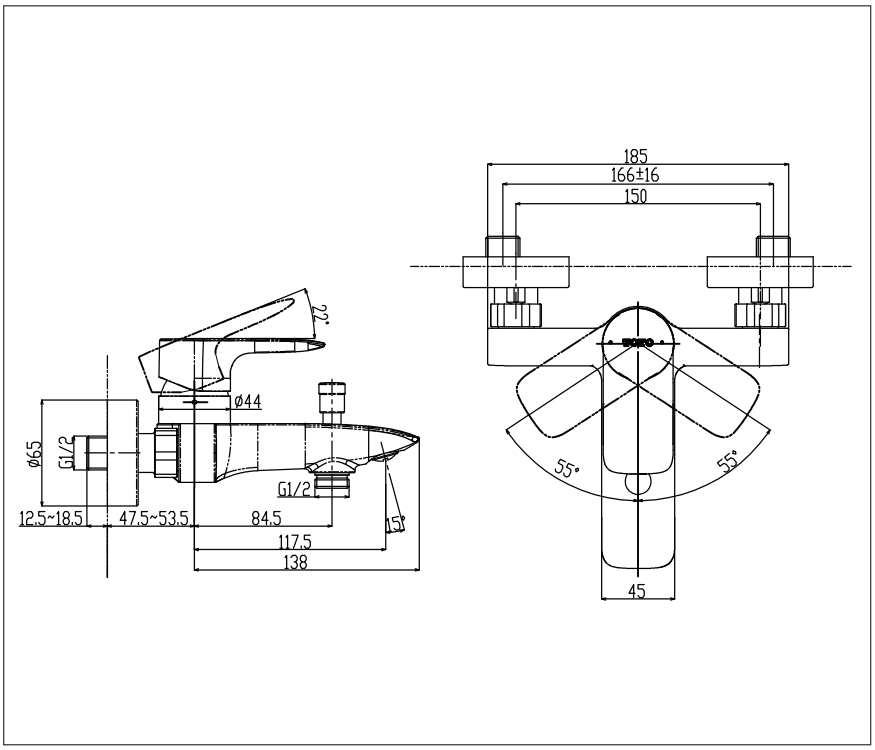

Parts Description

- ***TBG04302T***
  Single Lever Bath&Shower Mixer
  Without Hand Shower Set

Please consult a TOTO representative for details

TOTO (THAILAND) CO.,LTD
Bangkok Office : G Tower Grand Rama 9,12th Floor, South Wing, 9 Rama IX Road,Huaykwang Sub-district,Huaykwang District, Bangkok. 10310 Thailand
Tel : +(66)2-117-9520(AUTO) Fax : +(66)2-117-9527
th.toto.com

All rights reserved by TOTO company. Specifications and size are subject to change without notice.