TOTO | LAVATORIES

Wall Hung Lavatory

LW136WF

Features

- *Clean appearance of compact and sharp lines create a clean sanitory environment*
- CEFIONTECT *Technology: super smooth, ion barrier glazing for a clean lavatory*

Specifications

Size	*: 654W x 483D x 160H mm*
Material	*: Ceramic*

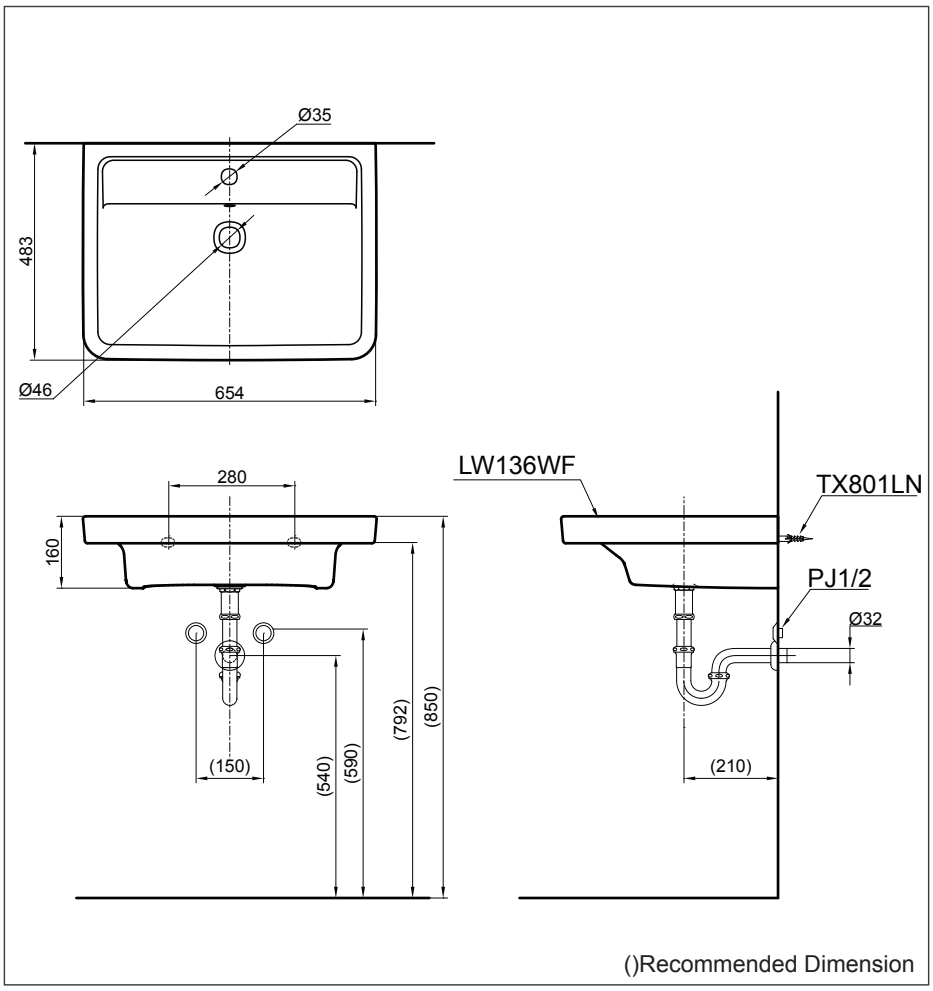

Parts description

Faucet not included

- ***LW136WF***
  Wall Hung Lavatory
- ***TX801LN***
  Wall Mounting Bolt

Colors

White (CEFIONTECT)

Please consult a TOTO representative for details

TOTO (THAILAND) CO.,LTD
Bangkok Office : G Tower Grand Rama 9,12th Floor, South Wing, 9 Rama IX Road,Huaykwang Sub-district,Huaykwang District, Bangkok. 10310 Thailand
Tel : +(66)2-117-9520(AUTO) Fax : +(66)2-117-9527
th.toto.com

All rights reserved by TOTO company. Specifications and size are subject to change without notice.